LiGHT SKY



NEW

MINI WHALE

OUTDOOR LAMP MOVING BEAM

IP66 · RoHS · RDM · DMX 512 · Art-net

FEATURES

- The MINI WHALE is a pure beam waterproof moving head light
- Its optical system incorporates high-precision optical components
- Featuring a ϕ174mm lens for long projection distance, high illuminance, dense beams, and sharp gobo;
- The system is equipped with an 8-facet prism and a 24-facet prism,
- Enabling multiple combination effects to create versatile prism beams with strong stereoscopic effects.
- The fixture achieves an illuminance of 720,000 lx @10m
- With Ra ≥80, vibrant colors, and excellent saturation.
- Designed for versatility, this compact and lightweight unit delivers precise positioning and rapid response
- Ideal for weddings, nightclubs, car shows, and other dynamic events.

Unit: mm

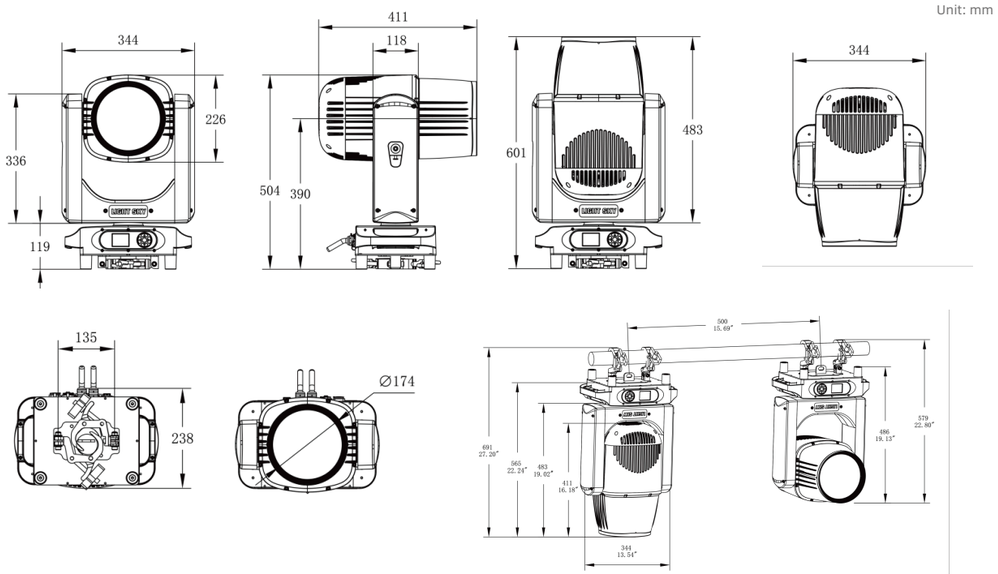

Light source & Optics
Light source: OSRAM NED40
Beam Angle: 1.3°(ϕ5mm aperture)/ 0.8°（ϕ3mm aperture） /0.5°（ϕ1.5mm aperture), switchable
Front Lens : ϕ174mm
Colour Temperature Output: 7000 K
Color Rendering Index (CRI): Ra≥80
Illuminance: 720, 000 lx @10m
Light Source Theory Life Span: 4000 h

Color
Color Wheel: 14 Colors + Blank, Bi-directional rainbow effect, dual-color stepping gradient (linear movement), and bidirectional color wheel rotation.

GOBO
Fixed gobo wheel: 17 fixed gobo +1 Blank ,supporting flowing water effect and jitter effect.

Effects
8-facet prism + 24-facet prism: Bidirectional independent rotation, individual switching, and multiple combination.
Frost : Independent Frost Effect
Focus: Motorized focus
Strobe: 0.5-12 times/sec Adjustable pulse strobe and random strobe
Dimmer : 0 to 100% linear dimmer

Control and Programming
Control channels: 15CH
Protocols: DMX512, RDM, Art-Net(optional)
DMX and RDM connectors: 3 pin or 5 pin XLR IN/OUT, RJ45(Art-Net)(optional)
Display: LCD screen
Upgrade software via DMX 512 protocol

Pan/Tilt Movement
Pan: 540°, 8-bit / 16-bit precision
Tilt: 270° , 8-bit / 16-bit precision

Power and Electrical
Input Voltage Range: AC 100-240V 50/60Hz
Max Power Consumption : 460W, PF0.98

Size and Weight
Product Dimensions: 344mm × 238mm × 601mm
Net Weight: 22.1kg
Carton Dimensions: 425mm × 305mm × 750mm
Gross Weight: 25.7kg

Other
IP Rate: IP66
Operating environment: -10℃~40℃
Max surface temperature: ≤80℃
Max. current: 2.08A/220V, 4.56A/100V

Color Wheel



Fixed Gobo Wheel



Function Effect



illumination diagram

